8" BARIATRIC ROLLATOR

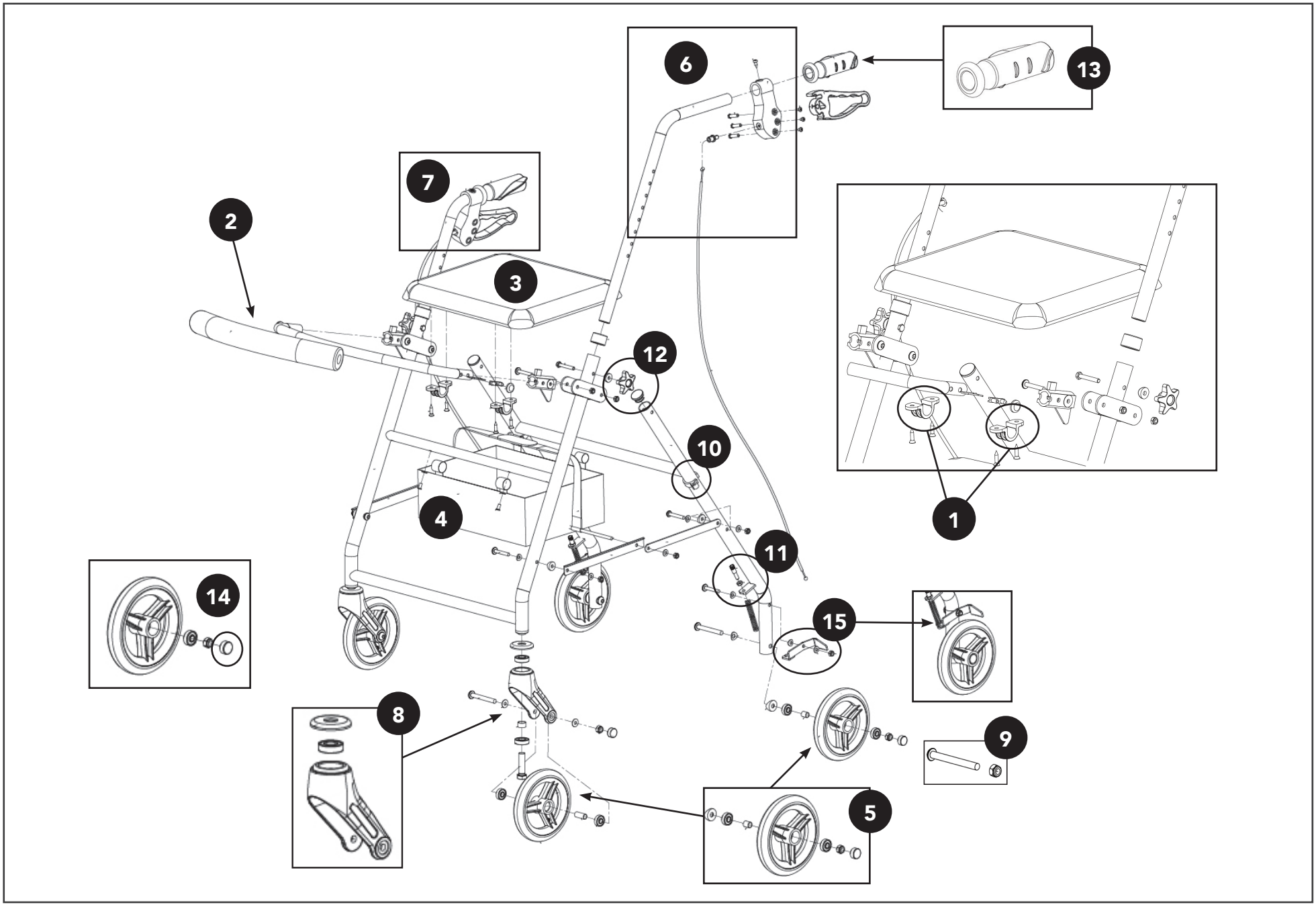

8" BARIATRIC ROLLATOR

Fig.	Description	MH Part No.
1	ProBasics 8" Alum HD Rollator Seat Clips and Screws	X1RLAB8MH01
2	ProBasics 8" Alum HD Rollator Backrest, Black (Hardware Not Included)	X1RLAB8MH02
3	ProBasics 8" Alum HD Rollator Replacement Seat	X1RLAB8MH03
4	ProBasics 8" Alum HD Rollator Replacement Pouch	X1RLAB8MH04
5	ProBasics 8" Alum HD Rollator Caster w/Bearing (Front or Rear)	X1RLAB8MH05
6	ProBasics 8" Alum HD Rollator Left Hand Brake Assembly (Includes brake spring & wheel contact)	X1RLAB8CD01
7	ProBasics 8" Alum HD Rollator Right Hand Brake Assembly (Includes brake spring & wheel contact)	X1RLAB8CD02
9	ProBasics 8" Alum HD Rollator Caster Axle Bolt w/Nut (Front or Rear)	X1RLAB8MH09
10	Probasics Brake Cable Ring	X1RLMH01
11	Probasics Rollator Brake Spring	X1RLMH02-3
12	Probasics Rollator Handle Height Adjustment Knob	X1RLMH03
13	Probasics Rollator Handle Grips, Pair	X1RLMH04
14	Probasics Rollator Caster Cap	X1RLMH05
15	Probasics Rollator Brake Wheel Contact	X1RLMH06-4
16	ProBasics Pivot Bracket/Holder (Detachable Plastic Piece On end of Backrest)	X1RLABBL01